# GMC MOTORHOME
# Rear Disc Brake Reaction Arm Assembly Instructions

**By APPLIED GMC**

**NOTE:**

**These instructions only cover installation of the reaction arm assemblies. Installation of the brake lines, brake booster, proportioning valve and parking brake will be covered in another document. A complete parts list is located on the last page of this document.**

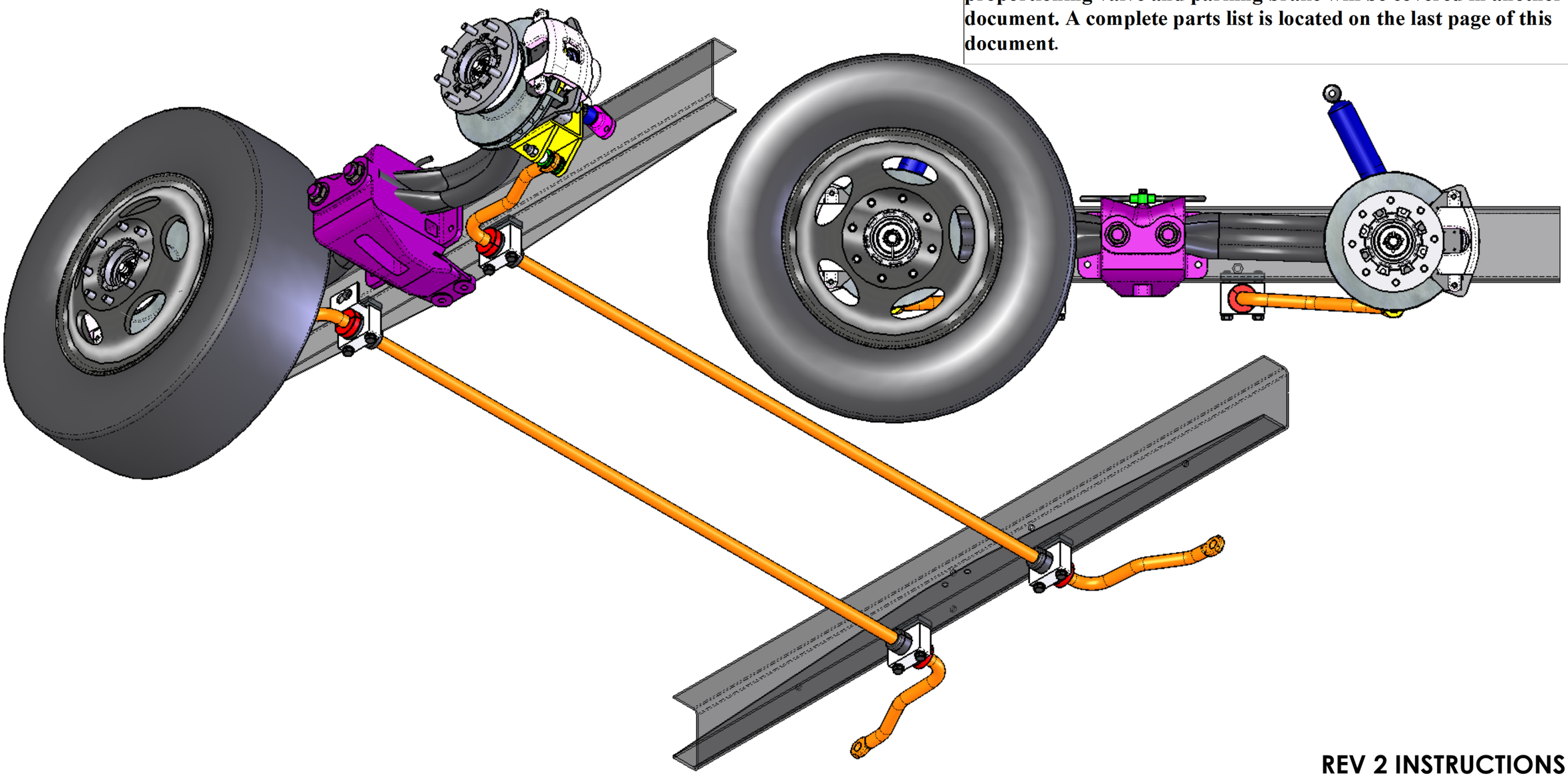

**REV 2 INSTRUCTIONS**

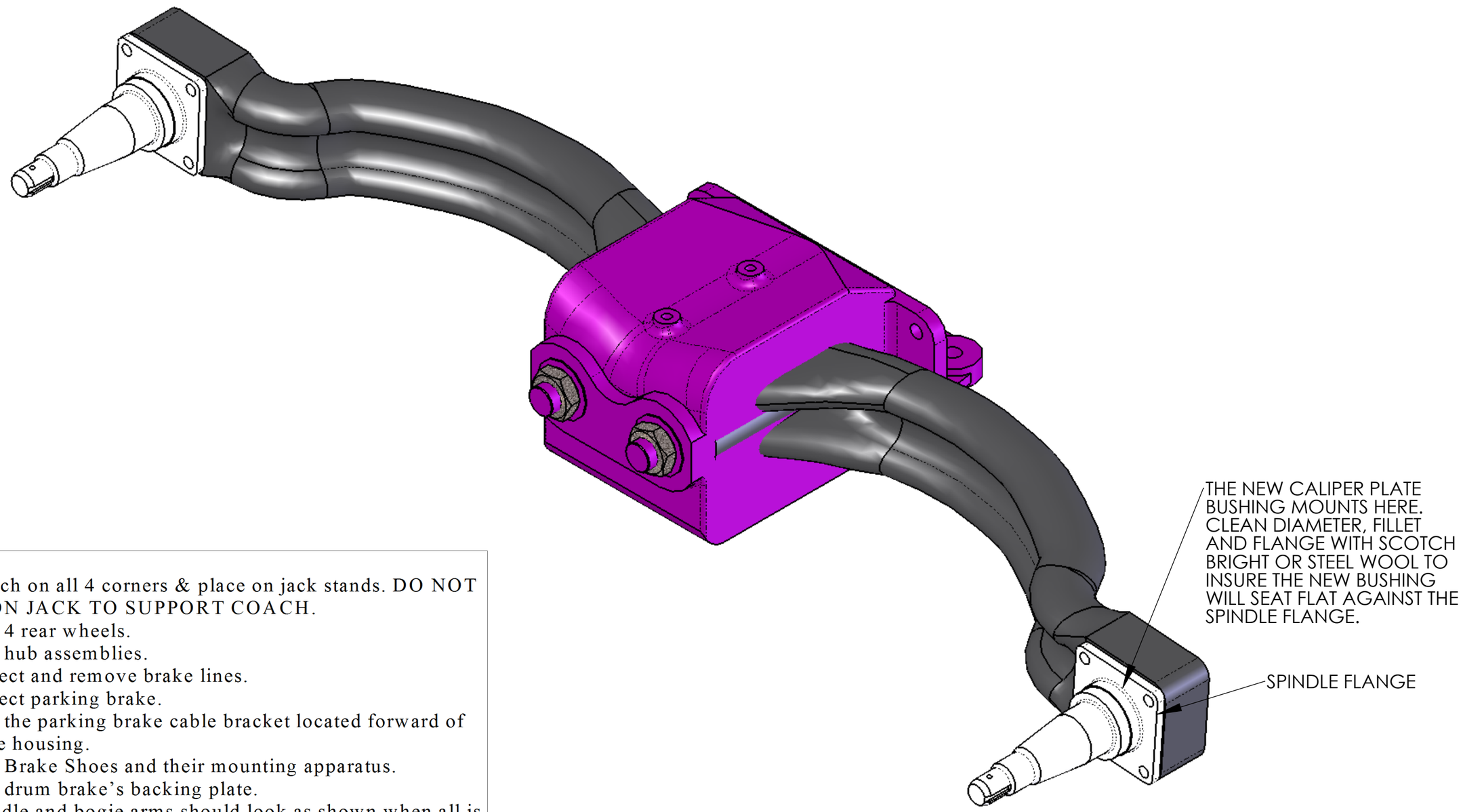


**STEP 1**

1- Jack coach on all 4 corners & place on jack stands. DO NOT RELY ON JACK TO SUPPORT COACH.
2- Remove 4 rear wheels.
3- Remove hub assemblies.
4- Disconnect and remove brake lines.
5- Disconnect parking brake.
6- Remove the parking brake cable bracket located forward of the bogie housing.
7- Remove Brake Shoes and their mounting apparatus.
8- Remove drum brake's backing plate.
9- The spindle and bogie arms should look as shown when all is removed.

Proceed to STEP 2.

**STEP 2**

1- Clean back side of bogie arm so large hole and back surface are free of dirt and grease. This will allow the bearing housing to mount in hole easily and flush to back side.

2- Install (4) 3/8-24 x 3-1/4 lg. bolts through spindle and bogie and into bearing housing. Apply small amount of LOC-TITE 271 high strength thread locker to last 10 threads of each bolt prior to insertion.

Proceed to STEP 3.

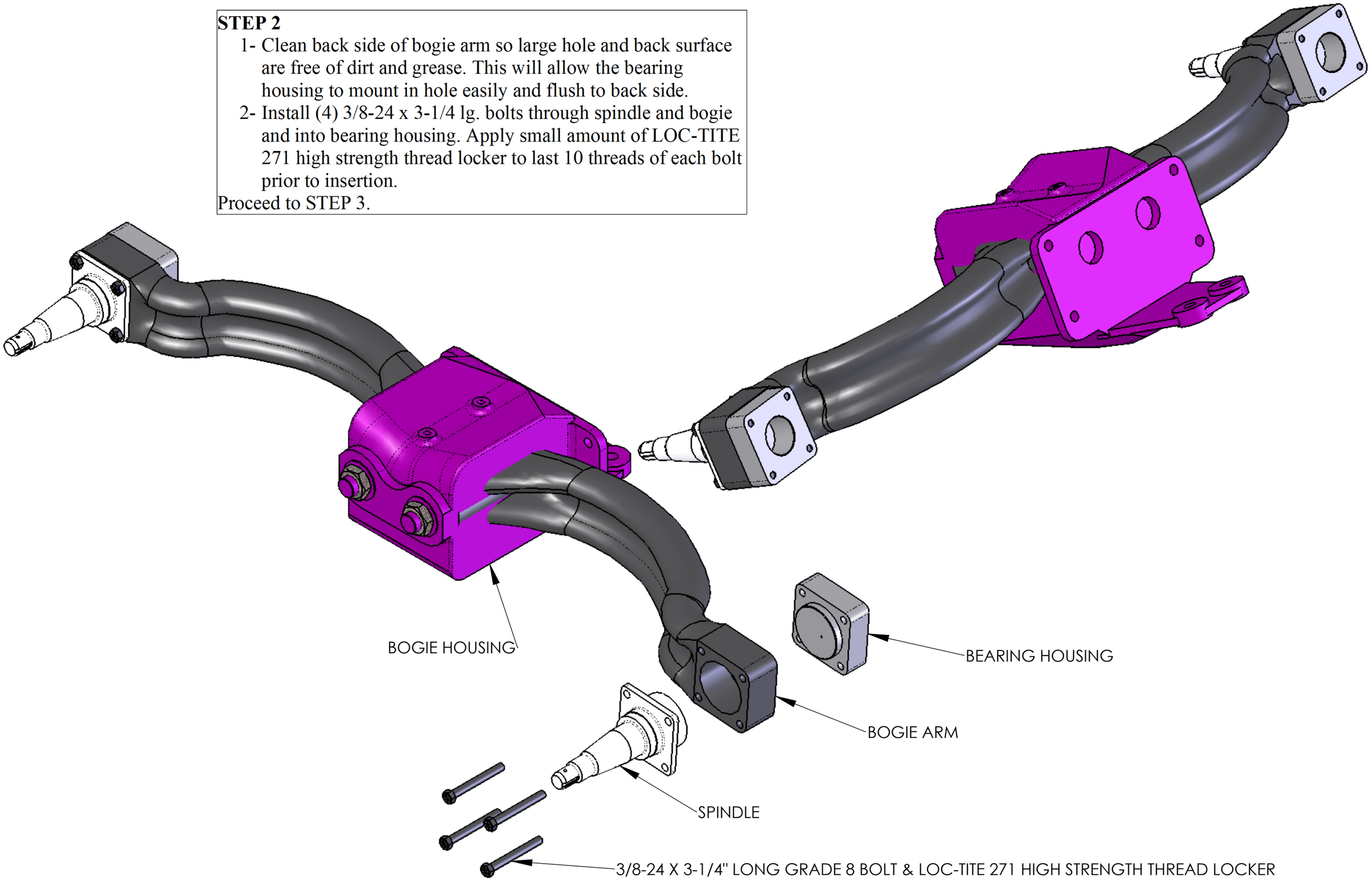

**STEP 3**

1- It's important to check fit of both bronze bushings into their mounting holes in the caliper plate and bearing housing before assembly. The bushings should be a slip fit so they can be easily removed for service.
2- Slide the caliper plate bushing onto spindle with its large I.D. radius facing spindle flange. Make sure bushing seats against spindle's flange. If it doesn't, clean the spindle with scotch bright & try again.
3- Apply synthetic bearing grease to all surfaces of both bushings and insert into their mounting bores in the caliper plate and bearing housing.
4- Push the caliper plate with bushing onto spindle until bushing bottoms out on spindle flange. NOTE; Bushing is designed to protrude slightly form caliper plate to prevent plate form rubbing on spindle flange during operation.
5- Slide the 1/32" plastic spacer onto the torque box post, and then slide the torque box into its bushing in the bearing housing.
6- Install (4) ½-13 x 1-1/4" long grade 8 bolts and lock nuts as shown.
7- NOTE: Axial Play is the amount of movement of the torque box/ caliper plate assembly along the spindle axis. We will install a self-locking adjustment set screw (Item #17) into the torque box to minimize axial play.
8- Test for axial play of the assembly. Push in and rotate caliper plate against bogie arm, then pull it back towards you while rotating. Do this a couple times to insure all parts are seated and maximum axial play is achieved.
9- Install the self-locking adjustment set screw (Item #17) and screw into the torque box as shown. Adjust set screw from the back of the torque box until all the axial play is gone. DO NOT OVERTIGHTEN SET SCREW.
10- When properly adjusted, the whole assembly should rotate smoothly with less then 1/32" of axial play.
11- Install angled grease zerk into rear of torque box's bearing post as shown.
12- Install the straight grease zerk into the edge of the caliper plate as shown.
13- Inject a small amount of bearing grease into the caliper plate until it appears on front of caliper plate.
14- Carefully wipe off excess grease form front of caliper plate.
15- Inject a small amount of grease into the torque box's zerk until it appears either at shim spacer or between bearing housing and bogie arm. There is a vent hole in bottom of the bearing housing to allow trapped air to escape. (Be careful not to apply too much grease.)
16- Rotate assembly by hand. It should still rotate smoothly although with a little more resistance due to the grease packing.

Proceed to STEP 4.

| ITEM NO. | PART DESCRIPTION | STEP5/QTY. |
|---|---|---|
| 1 | CHUCK'S BOGIE PIN HOUSING | 1 |
| 2 | LEFT BOGIE ARM | 1 |
| 3 | Right Bogie Arm-2 | 1 |
| 4 | SPINDLE | 2 |
| 5 | OUTSIDE NUT | 2 |
| 6 | BEARING HOUSING REV 4 | 2 |
| 7 | THREE EIGHTS GRADE 8 HEX BOLT 3.25 IN LG | 8 |
| 8 | 1.5 ID BRONZE BUSHING | 2 |
| 9 | CALIPER PLATE REV 5 | 2 |
| 10 | CALIPER PLATE BUSHING REV 2 | 2 |
| 11 | .03 PLASTIC SPACER | 2 |
| 12 | RIGHT ANGLE .25-20 ZERT FITTING | 2 |
| 13 | STRAIGHT .25-20 ZERT FITTING | 2 |
| 14 | HALF INCH GRADE 8 HEX BOLT 1.25 IN LG | 8 |
| 15 | HALF THIRTEEN HEX LOCK NUT | 8 |
| 16 | TORQUE BOX ASSY | 2 |
| 17 | TORQUE BOX ADJUSTMENT SET SCREW | 2 |

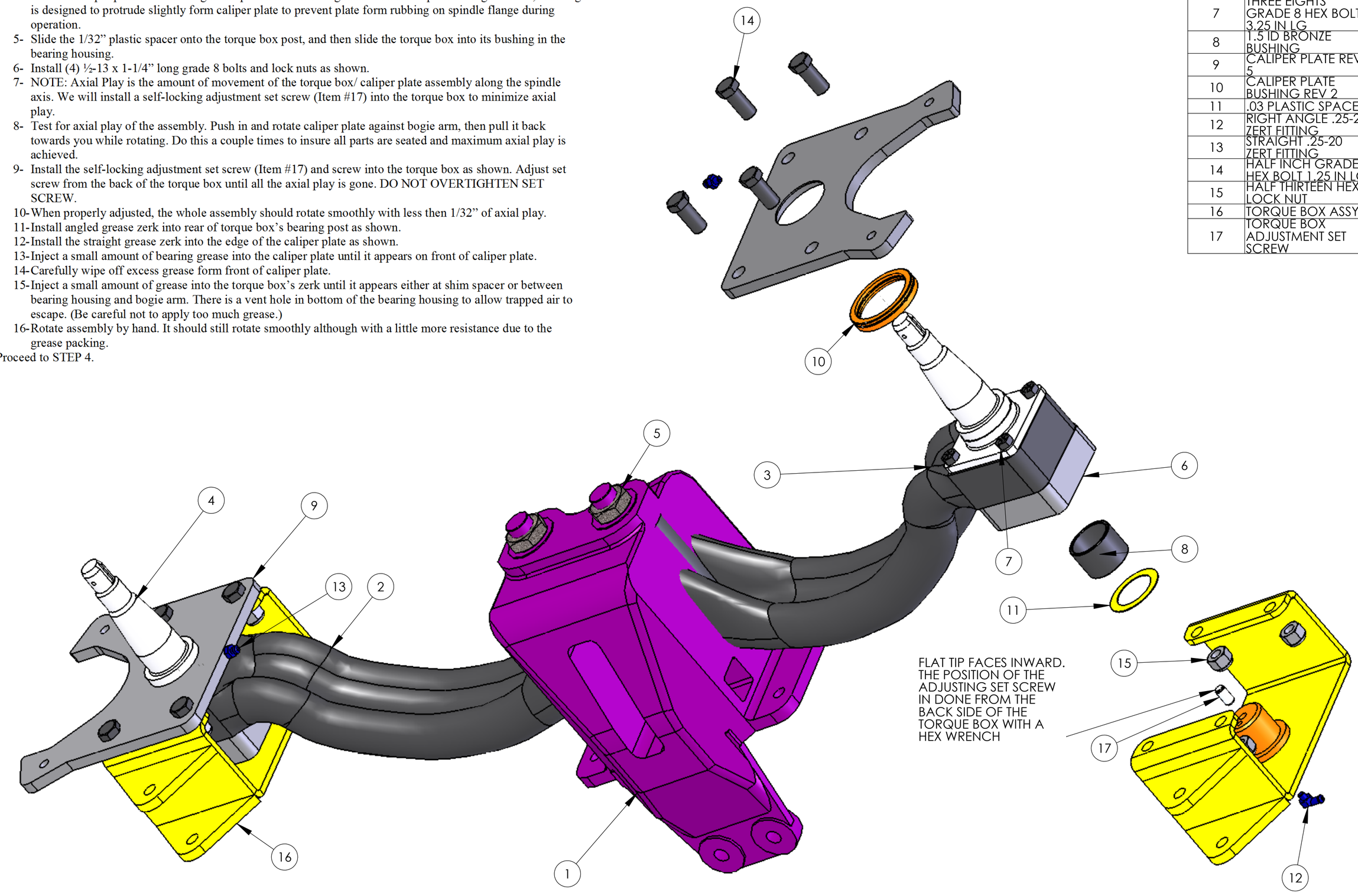

**STEP 4**

IMPORTANT:

Before drilling holes in frame, make sure no brake or gas lines are located on inside of frame where holes are to be drilled.

1- Place the drill jig over the bolt head on the frame as shown making sure to use the large hole closest to the bogie housing. The opposite hole is to be used on the other side of the bogie housing.
2- Pilot drill bushing bracket's mounting holes into underside of frame using ¼" drill.
3- Once all (8) ¼" holes are drilled, then follow up with 9/16" drilled holes. We use a 9/16" drill to allow clearance for tolerances in drilling and manufacture of parts.
4- Deburr all holes on both sides of frame with a file and/or counter sink.
5- Paint holes to avoid rust. Sway bar brackets are now ready to mount.
6- Proceed to STEP 5

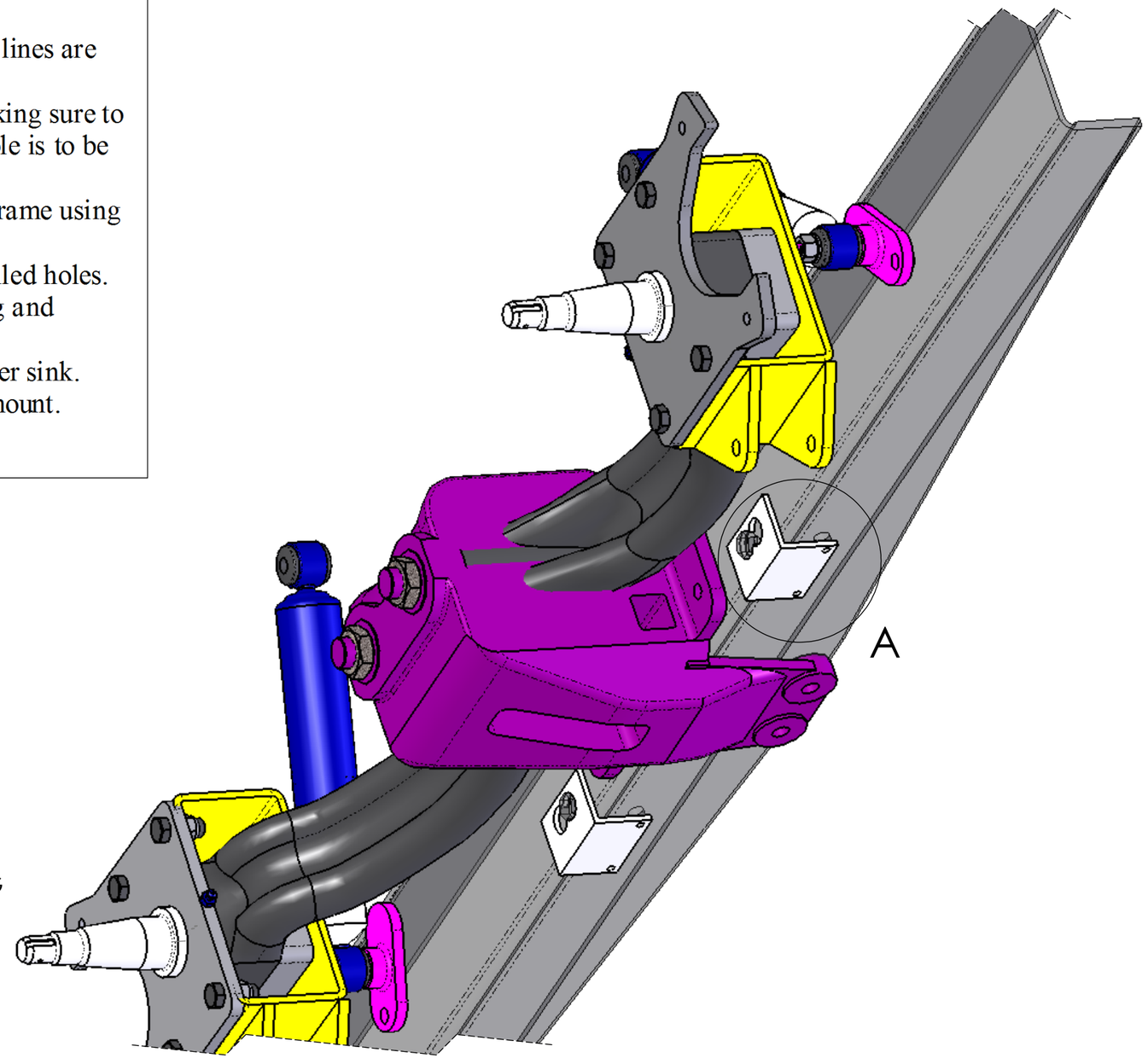


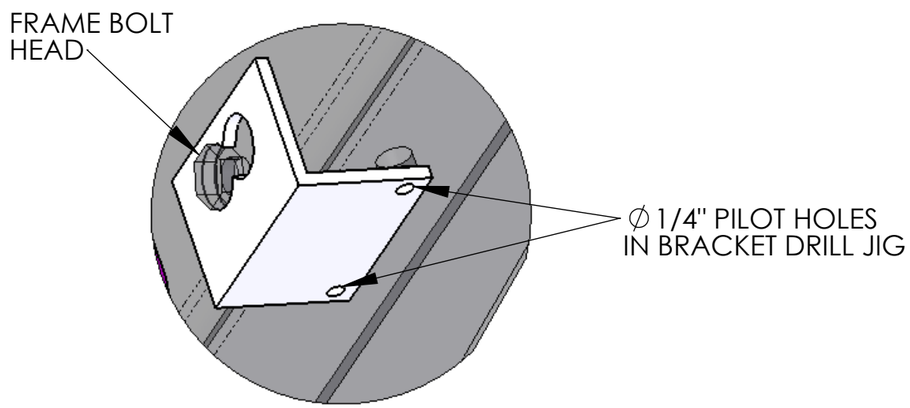


DETAIL A
SCALE 1 : 2

**STEP 5**

NOTE:
For ease of depiction, the entire length of the sway bar is not shown. Also, make sure that inside surface of frame is clean and burr free.

1- Mount one sway bar at a time. Before installing sway bars, mount each bushing bracket to frame with their nut plate to insure that their holes line up.
2- Once the bushing brackets have been checked for fit to frame, remove them.
3- Slip (1) bushing bracket onto each end of the sway bar with their filleted hole side facing end of sway bar.
4- Coat the inside diameter of urethane bushing and bushing bore of bushing bracket with silicone grease and pop bushing onto sway bar by spreading the slit in bushing side.
5- Push bushing into bushing bracket until its flange bottoms against bracket side as shown.
6- Install the split plastic shim washer and split shaft collar onto shaft as shown, but do not tighten bolts in collar until after sway bar is mounted and adjusted to torque box which is done in STEP 6 on next page.
7- Lift sway bar into place and support with blocks so both hands can be used for bolting bushing brackets to frame.
8- Install each bushing bracket loosely until both brackets are mounted and sway bar rotates freely in urethane bushings.
9- Now remove one bolt at a time and add a few drops of LOC-TITE 271 thread locker to last (5) threads of bolt and tighten bolt into place. Do the same for each bolt until all are mounted.

Proceed to STEP 6.

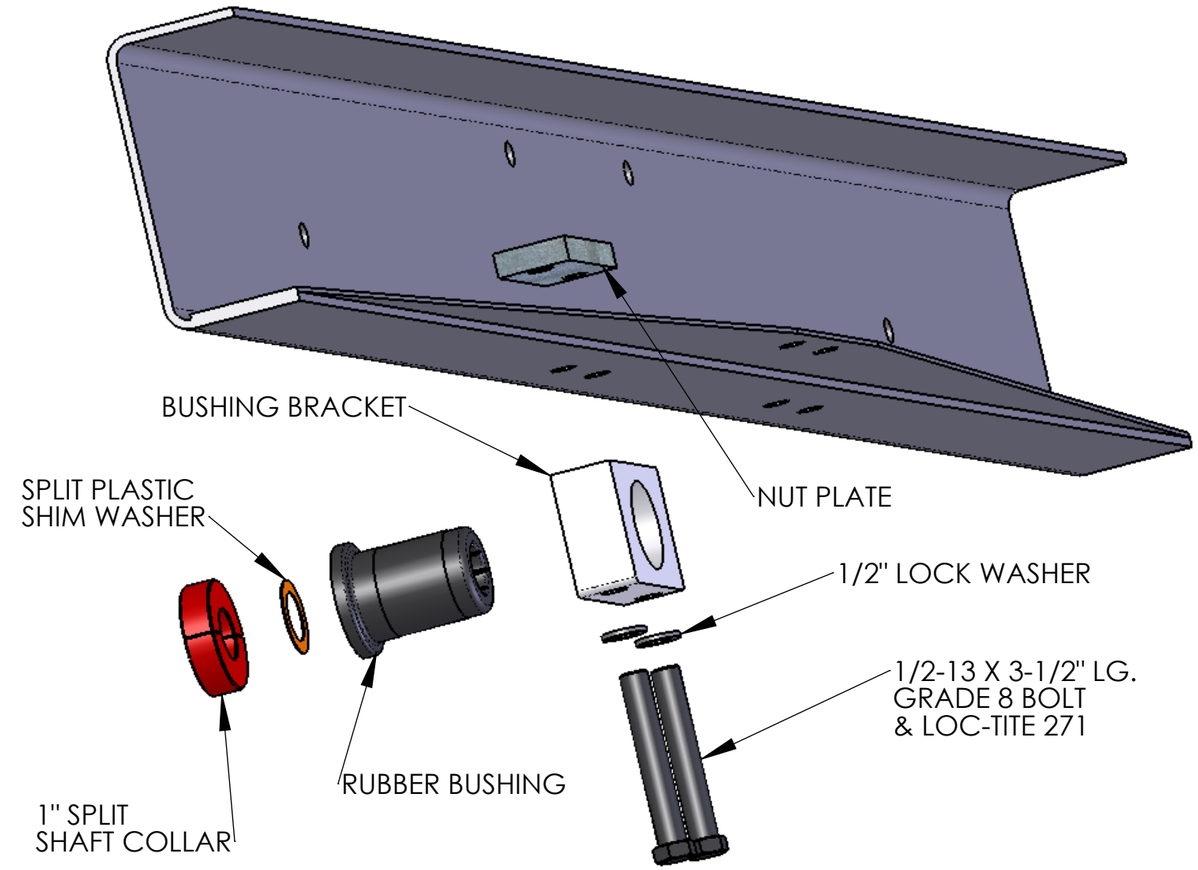


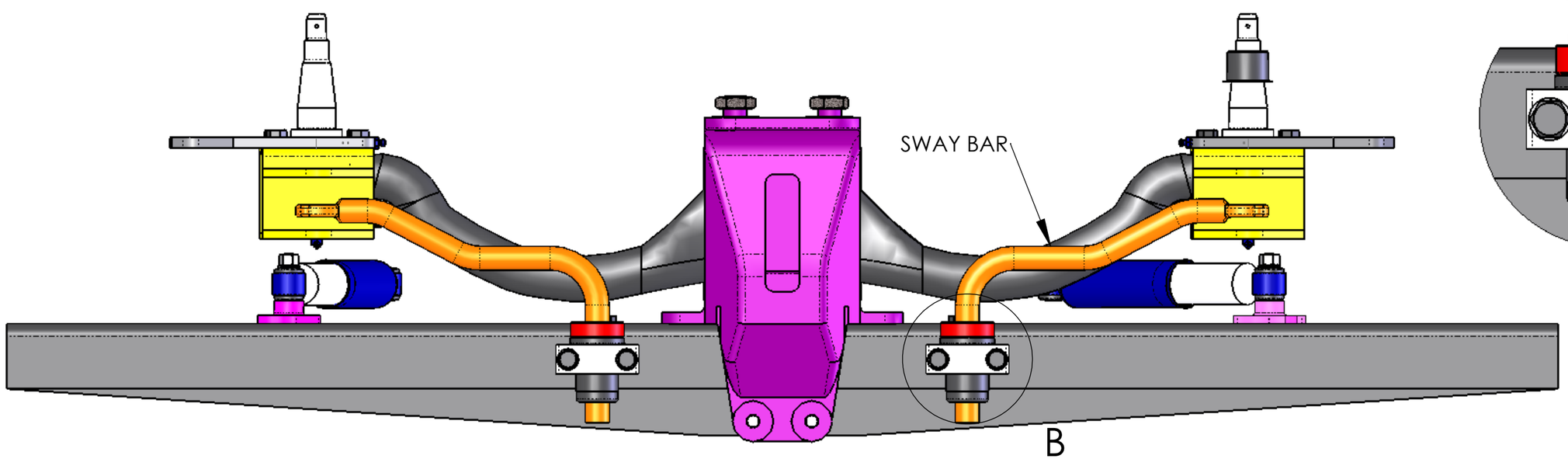


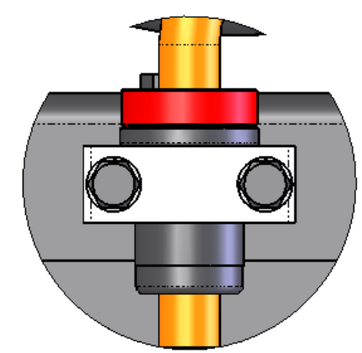

DETAIL B
SCALE 2 : 5

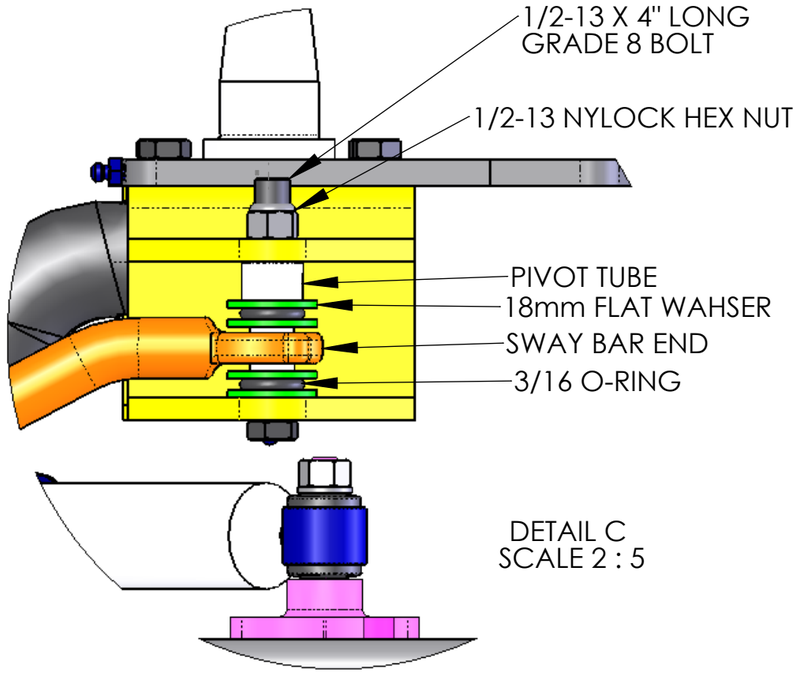


**STEP 6**

1- Make sure the suspension air bags are empty so bogie arms can be raised and lowered without restriction as needed.
2- Slide sway bar in and out until it is approximately the same distance from the outside ear of both torque boxes as shown. In other words, centered between both torque boxes.
3- NOTE: The distance between the two bogie arms are not the same for all coaches so we use flat washers as needed to take up the extra gap and o-rings to add a small amount of side load cushion. Slip flat washers and o-rings onto pivot tube and sway bar ends as shown.
4- Rotate sway bar up into its position in torque box and install ½-13 x 4" long grade 8 bolt through the torque box ears and pivot tube, but do not tighten yet.
5- Do the same on the other side of the coach.
6- Now tighten the bolt so it pinches the torque box ears tightly against the pivot tube.
7- Once both sway bars are mounted, rotate each bogie arm up and down to insure no binding is taking place.
8- Now slide the shaft collar against the split shim washer and urethane bushing as shown and evenly tighten both collar screws to lock collar in place.

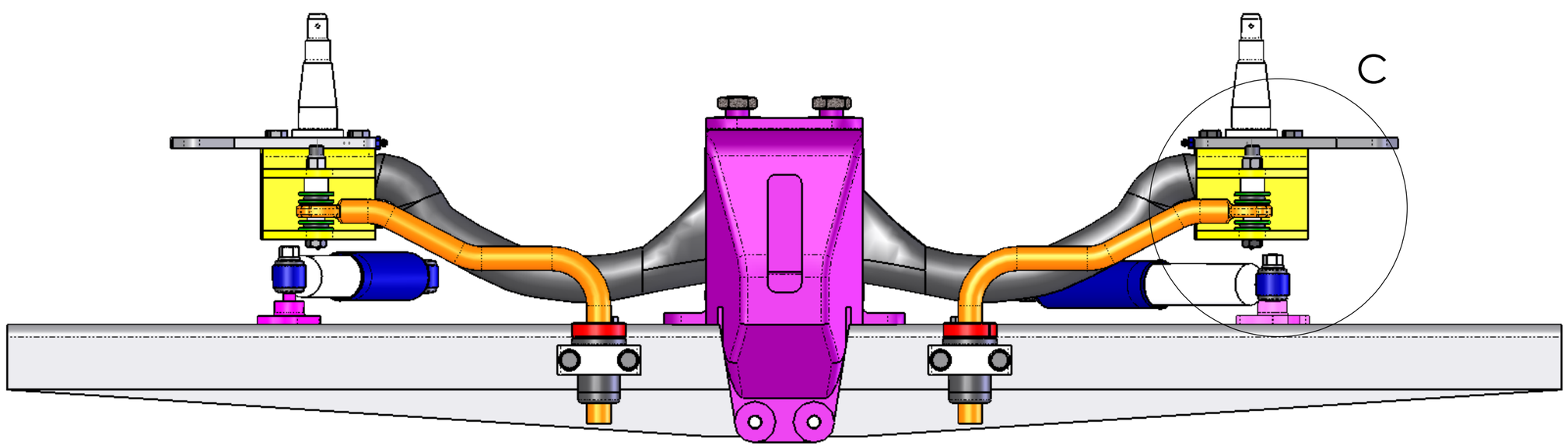

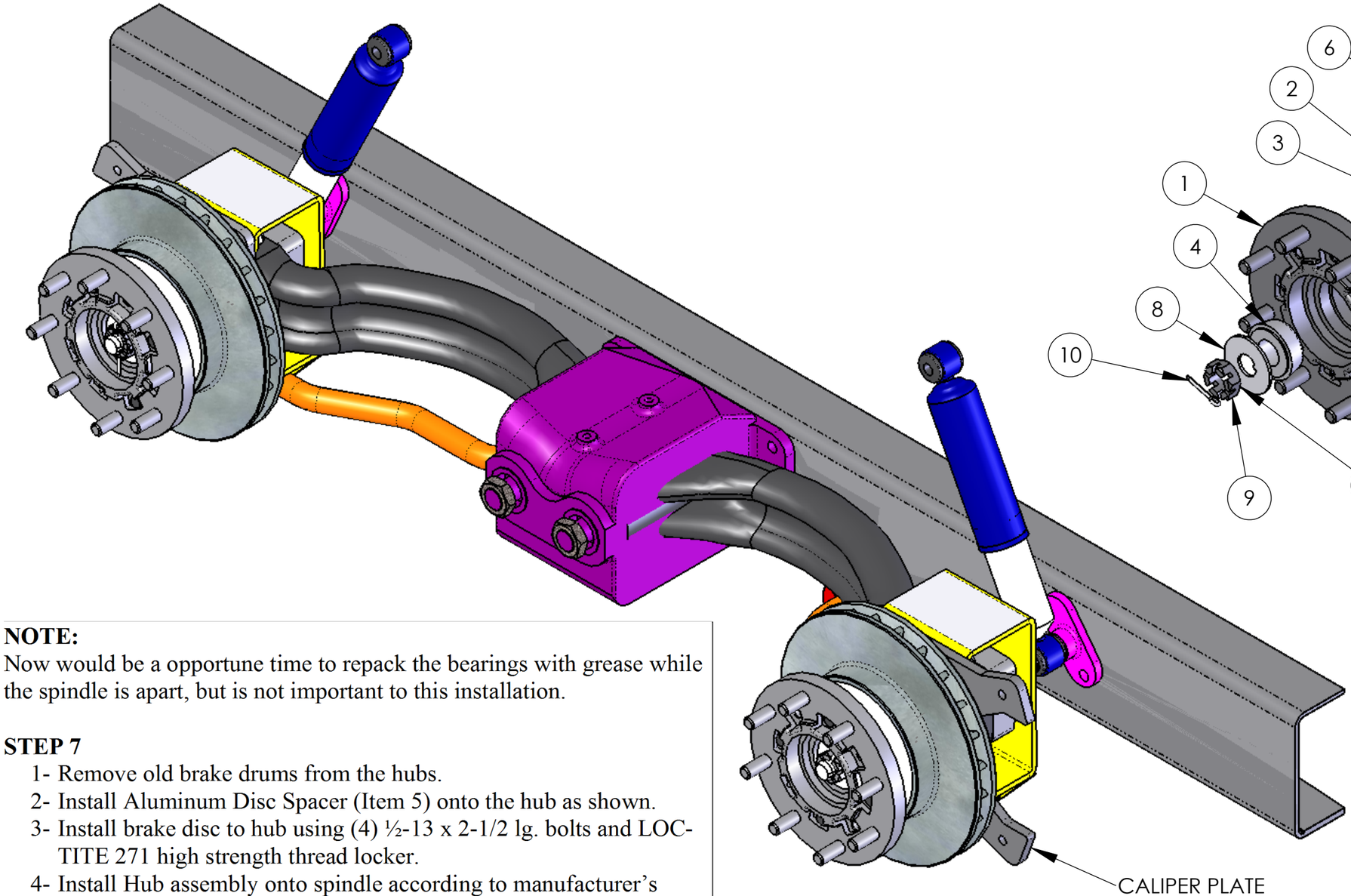


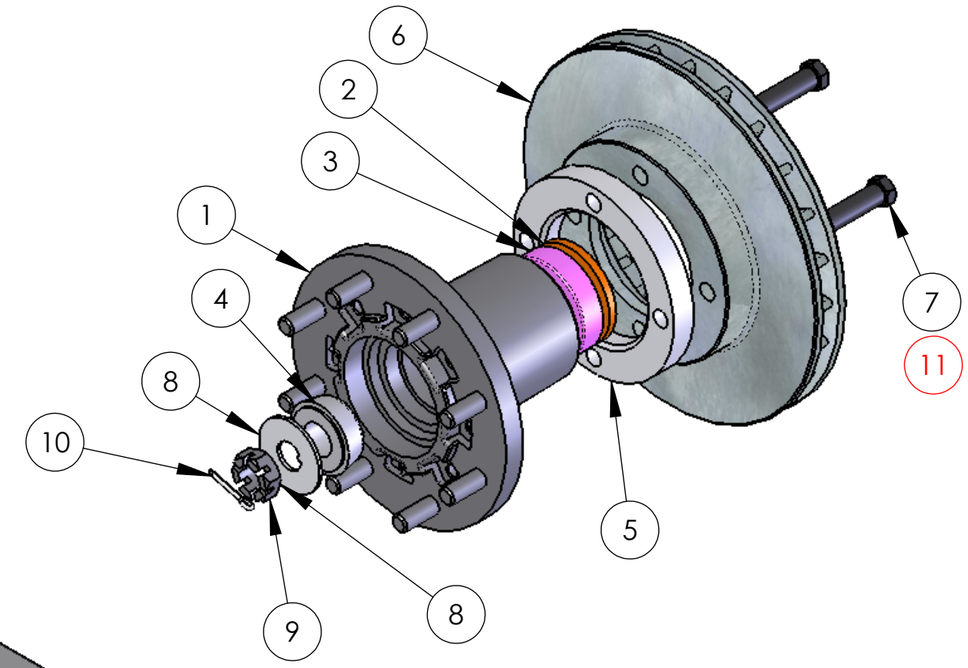


**NOTE:**
Now would be a opportune time to repack the bearings with grease while the spindle is apart, but is not important to this installation.

**STEP 7**

1- Remove old brake drums from the hubs.
2- Install Aluminum Disc Spacer (Item 5) onto the hub as shown.
3- Install brake disc to hub using (4) ½-13 x 2-1/2 lg. bolts and LOC-TITE 271 high strength thread locker.
4- Install Hub assembly onto spindle according to manufacturer's instructions.
5- Rotate hub assembly. It should rotate smoothly and not rub on caliper plate.
6- Proceed to STEP 8.

| ITEM NO. | PART DESCRIPTION | QTY. |
|---|---|---|
| 1 | HUB | 1 |
| 2 | REAR SEAL | 1 |
| 3 | INNER BEARING | 1 |
| 4 | OUTER BEARING | 1 |
| 5 | ALUMINUM DISC SPACER, 3/4" THK | 1 |
| 6 | 11" BRAKE DISC | 1 |
| 7 | 1/2-13 x 2-1/2" LG GRADE 8 HEX BOLT | 4 |
| 8 | SPINDLE THRUST WASHER | 1 |
| 9 | SPINDLE LOCK NUT | 1 |
| 10 | COTTER PIN | 1 |
| 11 | LOC-TITE 271 | 1 |

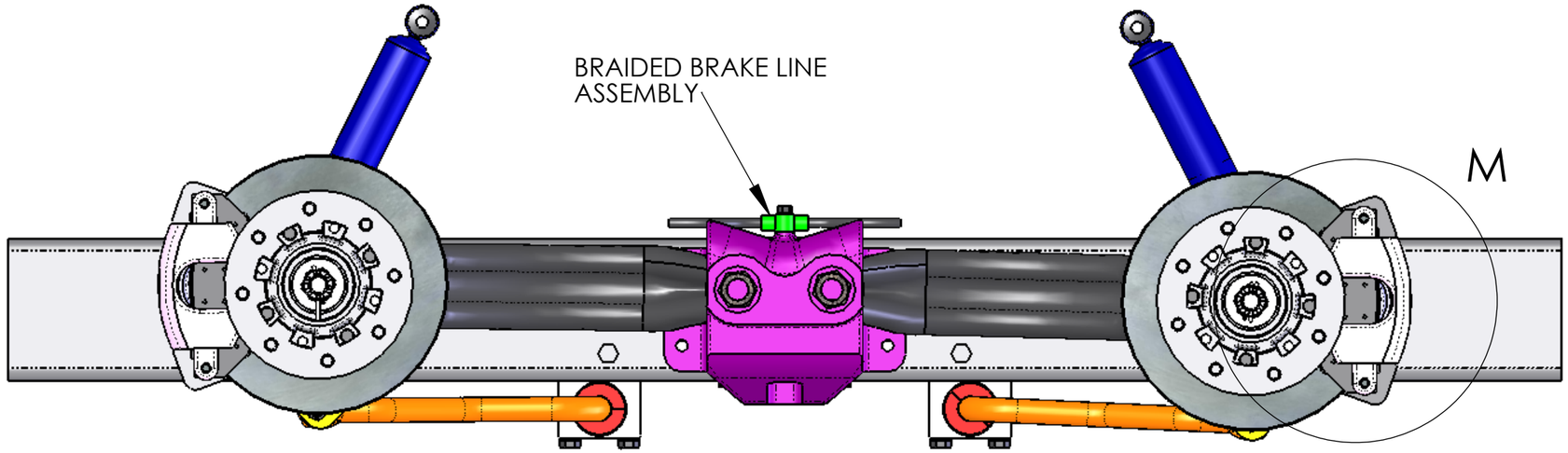


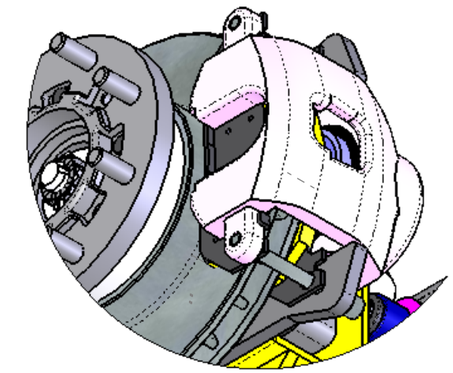

DETAIL L
SCALE 1 : 4

**STEP 8**

1- Install calipers per manufacturer's instructions.
2- Install rear brake lines per manufacturer's instructions.
3- Bleed all brakes per manufacturer's instructions.

Proceed to STEP 9

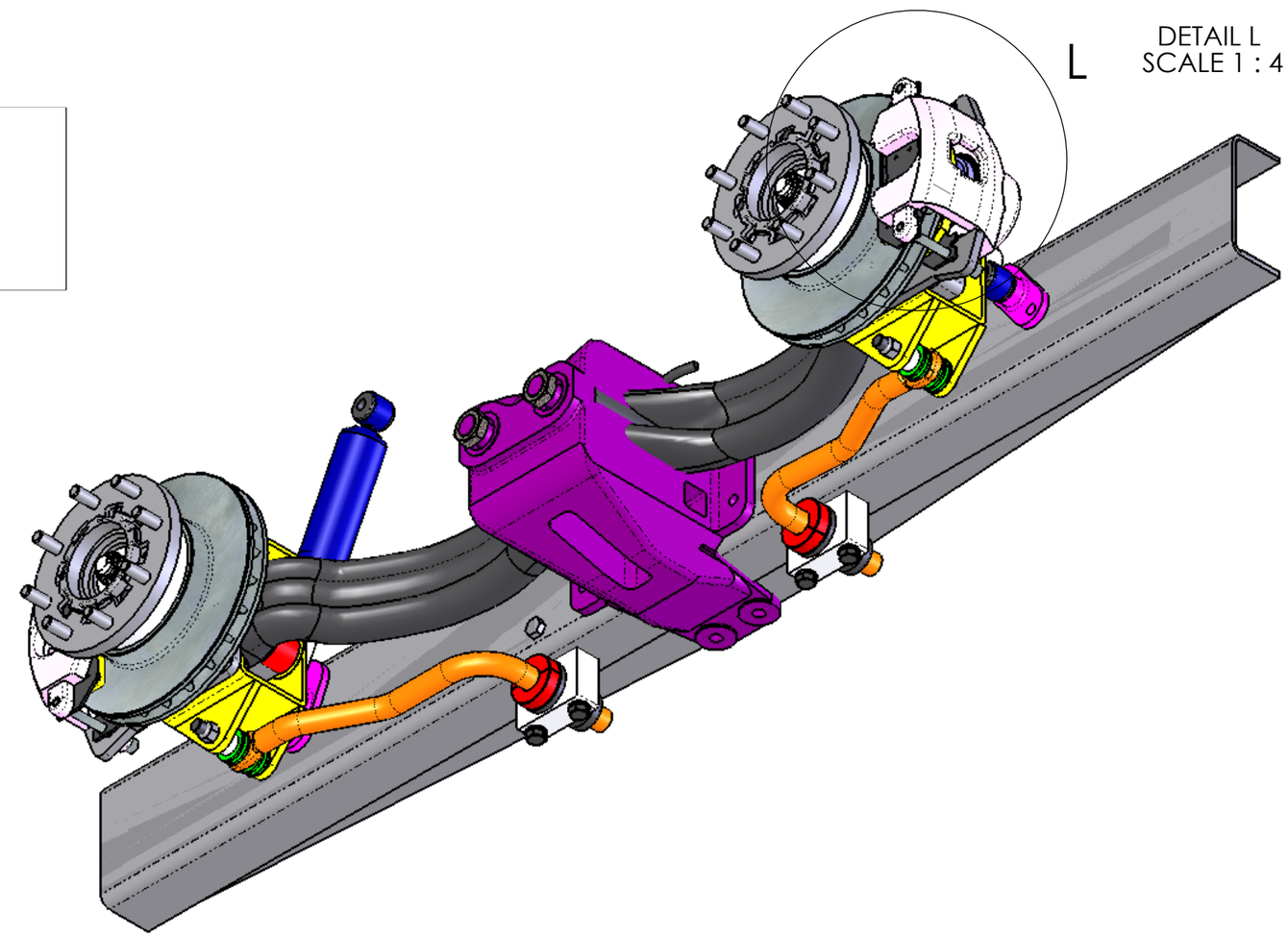


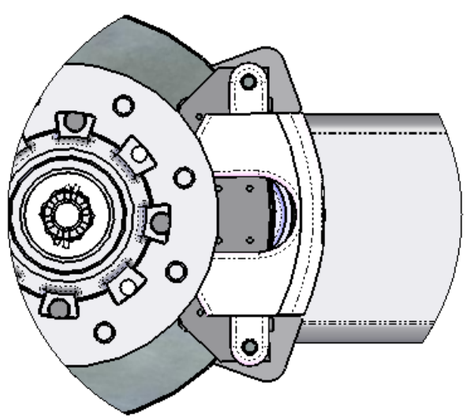

DETAIL M
SCALE 1 : 4

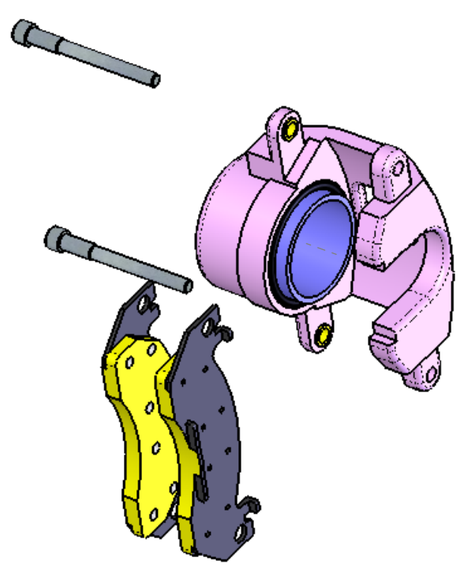

**THIS PARTS LIST ONLY ITEMIZES PARTS & MATERIALS NEEDED TO INSTALL THE DISK BRAKES & REACTION ARM.**

| QTY. | PART DESCRIPTION | WHERE USED |
|---|---|---|
| 16 | 3/8-24 x 3-1/4" LG GRADE 8 BOLT | STEP 2 |
| 16 | 1/2-13 x 1-1/4" LG GRADE 8 BOLT | STEP 3 |
| 16 | 1/2-13 x 2-1/4" LG GRADE 8 BOLT | STEP 7 |
| 8 | 1/2-13 x 3-1/2" LG GRADE 8 BOLT | STEP 5 |
| 4 | 1/2-13 x 4" LG GRADE 8 BOLT | STEP 6 |
| 20 | 1/2-13 GRADE 8 HEX LOCK NUT | STEPS 3 & 5 |
| 8 | 1/2" SPLIT LOCK WASHER | STEP 5 |
| 20 | 18mm FLAT WASHER | STEP 6 |
| 4 | 3/8-16 x 3/4" LG. EXTENDED POINT SETSCREW | STEP 3 |
| 4 | ZERT FITTING, RIGHT ANGLE 1/4-28 TPI | STEP 3 |
| 4 | ZERT FITTING, STRAIGHT 1/4-28 TPI | STEP 3 |
| 4 | 1" I.D. URETHANE BUSHING | STEP 5 |
| 8 | O-RING 3/4"I.D. x 3/16" CROSSECTION | STEP 6 |
| 4 | PLASTIC SHIM WASHER 1"I,D, x 1/32" THK. | STEP 5 |
| 4 | PLASTIC SHIM WASHER 1-1/2"I,D, x 1/32" THK. | STEP 3 |
| 4 | SHAFT COLLAR, SPLIT 1" I.D. | STEP 5 |
| 4 | BRONZE BUSHING 1-1/2" I.D. x 1-3/4" O.D. x 1-1/4" LG. | STEP 3 |
| | | |
| | **CUSTOM PARTS** | |
| 2 | SWAY BAR, 1" DIAMETER | STEP 5 |
| 4 | ALUMINUM DISK SPACER, 3/4" THK. | STEP 7 |
| 4 | BEARING HOUSING | STEP 2 |
| 4 | CALIPER PLATE | STEP 3 |
| 4 | BEARING POST (WELDED INTO TORQUE BOX) | STEP 3 |
| 4 | CALIPER PLATE BUSHING | STEP 3 |
| 4 | PIVOT TUBE | STEP 6 |
| 4 | SWAY BAR BUSHING MOUNT | STEP 5 |
| 4 | NUT PLATE | STEP 5 |
| 1 | DRILL JIG, BUSHING MOUNT | STEP 4 |
| | | |
| 4 | CALIPER HOUSING | STEP 8 |
| 3 | BRAKE PADS (1 SET PER AXEL) | STEP 8 |
| 4 | BRAKE LINE, BRAIDED | STEP 8 |
| 4 | BRAKE HOSE ADAPTER | STEP 8 |
| 2 | JUNCTION BLOCK, BRAKE LINE | STEP 8 |
| 8 | CABLE TIES, 12" LONG, BLACK | STEP 8 |
| 1 | LOC-TITE 271, HIGH STRENGTH THREAD LOCKER | STEP 2,5 & 7 |
| 1 | BEARING GREASE, SYNTHETIC | STEP 3 &7 |

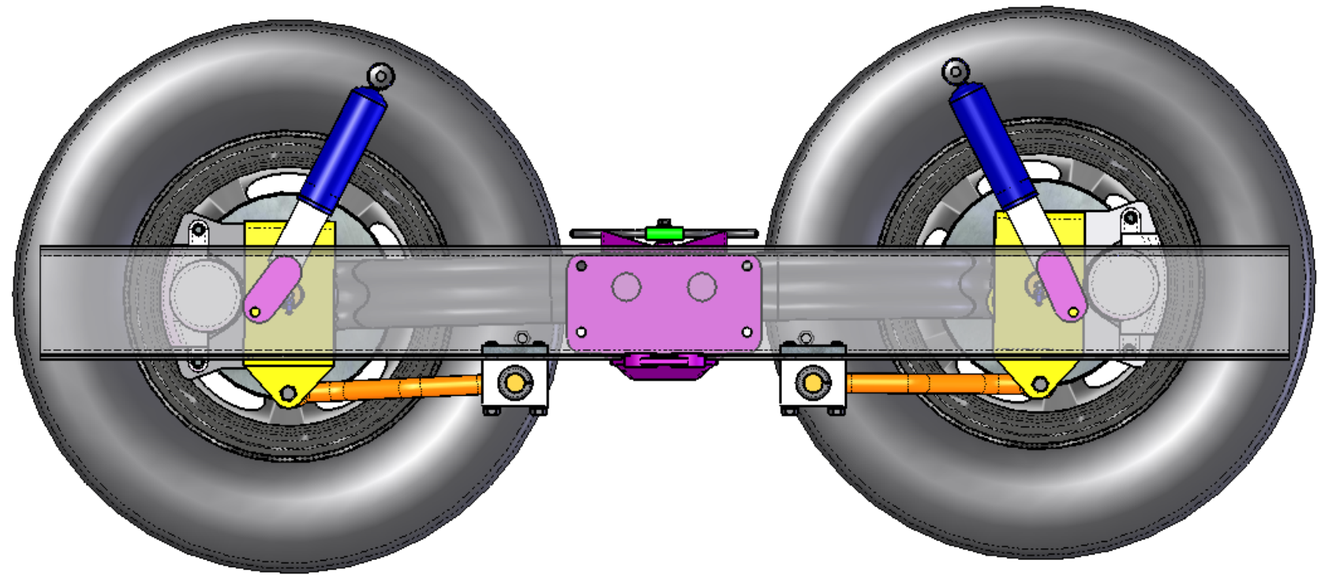

**STEP 9**
**IMPORTANT NOTE:**

Correct ride height is very important for proper brake operation. If ride height is set too high, then the shocks are close to bottoming out. This can cause the rear tire to skid during hard braking.

1- Reinstall wheels and tires.
2- Fill suspension air bags.
3- Lower coach to ground.
4- Adjust ride height.
5- Break in the brakes according to manufacturer's recommendations.

**NOW ENJOY YOUR NEW BRAKES!!**